Cambridge International AS & A Level

Cambridge Assessment International Education
Cambridge International Advanced Subsidiary and Advanced Level

CANDIDATE NAME

CENTRE NUMBER

CANDIDATE NUMBER

0622058970

PHYSICS **9702/21**

Paper 2 AS Level Structured Questions **May/June 2019**

1 hour 15 minutes

Candidates answer on the Question Paper.

No Additional Materials are required.

READ THESE INSTRUCTIONS FIRST

Write your centre number, candidate number and name on all the work you hand in.
Write in dark blue or black pen.
You may use an HB pencil for any diagrams or graphs.
Do not use staples, paper clips, glue or correction fluid.
DO **NOT** WRITE IN ANY BARCODES.

Answer **all** questions.

Electronic calculators may be used.
You may lose marks if you do not show your working or if you do not use appropriate units.

At the end of the examination, fasten all your work securely together.
The number of marks is given in brackets [ ] at the end of each question or part question.

This document consists of **15** printed pages and **1** blank page.

© UCLES 2019

Cambridge Assessment International Education

Data

speed of light in free space	$c = 3.00 \times 10^{8}\,\text{m s}^{-1}$
permeability of free space	$\mu_0 = 4\pi \times 10^{-7}\,\text{H m}^{-1}$
permittivity of free space	$\varepsilon_0 = 8.85 \times 10^{-12}\,\text{F m}^{-1}$
	$(\frac{1}{4\pi\varepsilon_0} = 8.99 \times 10^{9}\,\text{m F}^{-1})$
elementary charge	$e = 1.60 \times 10^{-19}\,\text{C}$
the Planck constant	$h = 6.63 \times 10^{-34}\,\text{J s}$
unified atomic mass unit	$1\,\text{u} = 1.66 \times 10^{-27}\,\text{kg}$
rest mass of electron	$m_e = 9.11 \times 10^{-31}\,\text{kg}$
rest mass of proton	$m_p = 1.67 \times 10^{-27}\,\text{kg}$
molar gas constant	$R = 8.31\,\text{J K}^{-1}\,\text{mol}^{-1}$
the Avogadro constant	$N_A = 6.02 \times 10^{23}\,\text{mol}^{-1}$
the Boltzmann constant	$k = 1.38 \times 10^{-23}\,\text{J K}^{-1}$
gravitational constant	$G = 6.67 \times 10^{-11}\,\text{N m}^2\,\text{kg}^{-2}$
acceleration of free fall	$g = 9.81\,\text{m s}^{-2}$

© UCLES 2019

Formulae

uniformly accelerated motion	$s = ut + \frac{1}{2}at^2$ $v^2 = u^2 + 2as$
work done on/by a gas	$W = p\Delta V$
gravitational potential	$\phi = -\frac{Gm}{r}$
hydrostatic pressure	$p = \rho gh$
pressure of an ideal gas	$p = \frac{1}{3}\frac{Nm}{V}\langle c^2 \rangle$
simple harmonic motion	$a = -\omega^2 x$
velocity of particle in s.h.m.	$v = v_0 \cos \omega t$ $v = \pm \omega \sqrt{(x_0^2 - x^2)}$
Doppler effect	$f_o = \frac{f_s v}{v \pm v_s}$
electric potential	$V = \frac{Q}{4\pi\varepsilon_0 r}$
capacitors in series	$1/C = 1/C_1 + 1/C_2 + \ldots$
capacitors in parallel	$C = C_1 + C_2 + \ldots$
energy of charged capacitor	$W = \frac{1}{2}QV$
electric current	$I = Anvq$
resistors in series	$R = R_1 + R_2 + \ldots$
resistors in parallel	$1/R = 1/R_1 + 1/R_2 + \ldots$
Hall voltage	$V_H = \frac{BI}{ntq}$
alternating current/voltage	$x = x_0 \sin \omega t$
radioactive decay	$x = x_0 \exp(-\lambda t)$
decay constant	$\lambda = \frac{0.693}{t_{\frac{1}{2}}}$

© UCLES 2019

[Turn over

BLANK PAGE

© UCLES 2019

Answer **all** the questions in the spaces provided.

1 **(a)** Define *velocity*.

.....

.....[1]

(b) The speed v of a sound wave through a gas of pressure P and density ρ is given by the equation

$$v = \sqrt{\frac{kP}{\rho}}$$

where k is a constant that has no units.

An experiment is performed to determine the value of k. The data from the experiment are shown in Fig. 1.1.

quantity	value	uncertainty
v	$3.3 \times 10^2\,\text{m s}^{-1}$	± 3%
P	$9.9 \times 10^4\,\text{Pa}$	± 2%
ρ	$1.29\,\text{kg m}^{-3}$	± 4%

Fig. 1.1

(i) Use data from Fig. 1.1 to calculate k.

k = ... [2]

(ii) Use your answer in **(b)(i)** and data from Fig. 1.1 to determine the value of k, with its absolute uncertainty, to an appropriate number of significant figures.

k = ... ± ..... [3]

[Total: 6]

© UCLES 2019

[Turn over

2 A block X slides along a horizontal frictionless surface towards a stationary block Y, as illustrated in Fig. 2.1.

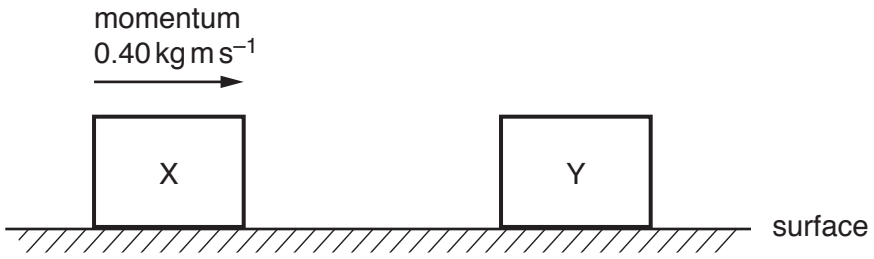

Fig. 2.1

There are no resistive forces acting on block X as it moves towards block Y. At time $t = 0$, block X has momentum $0.40\,\text{kg m s}^{-1}$. A short time later, the blocks collide and then separate.

The variation with time t of the momentum of block Y is shown in Fig. 2.2.

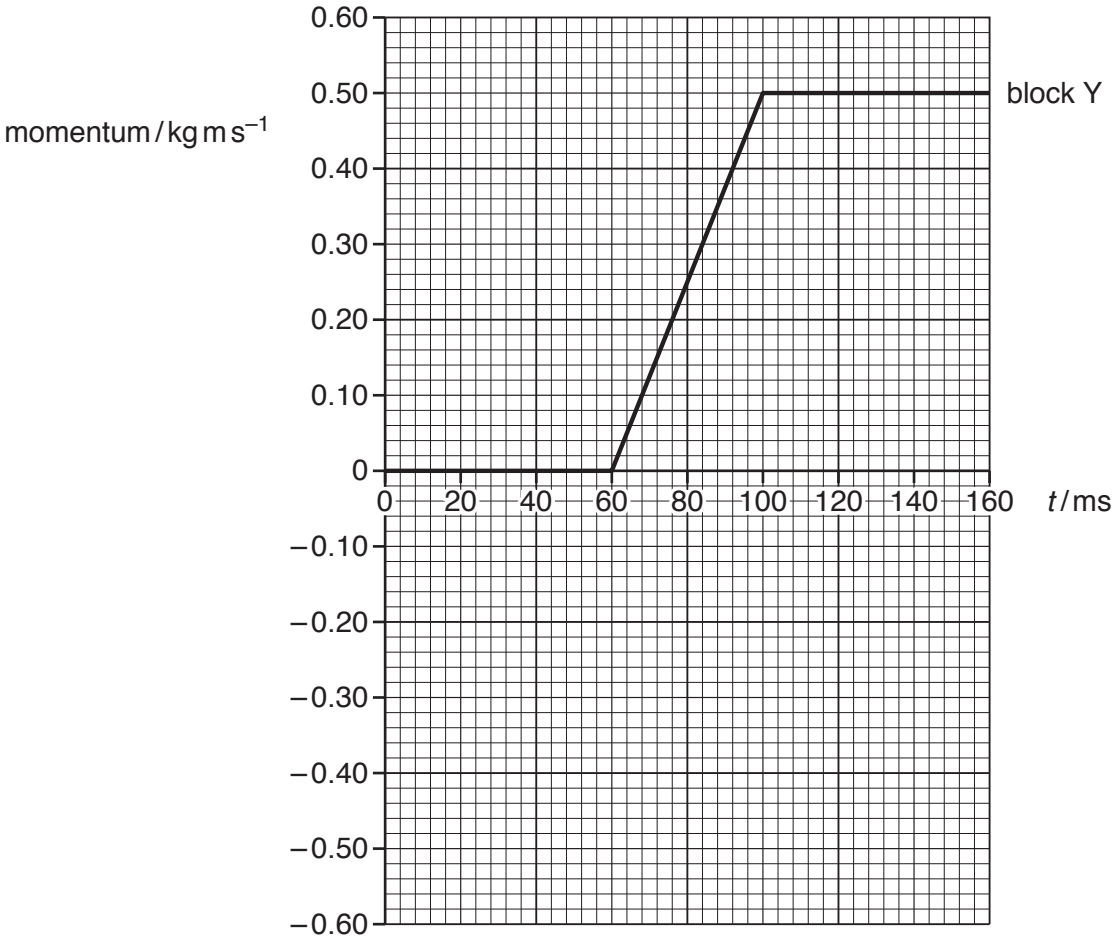

Fig. 2.2

(a) Define *linear momentum*.

.....[1]

(b) Use Fig. 2.2 to:

(i) determine the time interval over which the blocks are in contact with each other

time interval = ... ms [1]

(ii) describe, without calculation, the magnitude of the acceleration of block Y from:

1. time $t = 80$ ms to $t = 100$ ms

.....

2. time $t = 100$ ms to $t = 120$ ms.

.....
[2]

(c) Use Fig. 2.2 to determine the magnitude of the force exerted by block X on block Y.

force = ... N [2]

(d) On Fig. 2.2, sketch the variation of the momentum of block X with time t from $t = 0$ to $t = 160$ ms. [3]

[Total: 9]

© UCLES 2019

[Turn over

3 The variation with extension x of the force F acting on a spring is shown in Fig. 3.1.

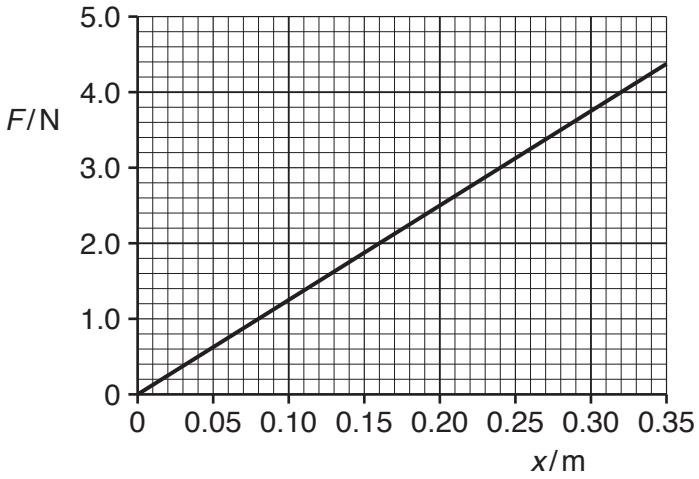

Fig. 3.1

The spring of unstretched length 0.40 m has one end attached to a fixed point, as shown in Fig. 3.2.

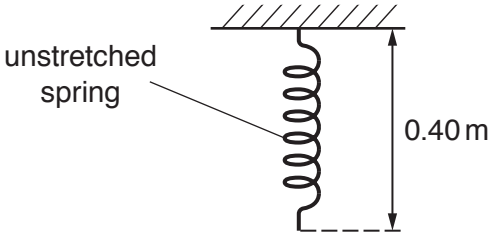

Fig. 3.2

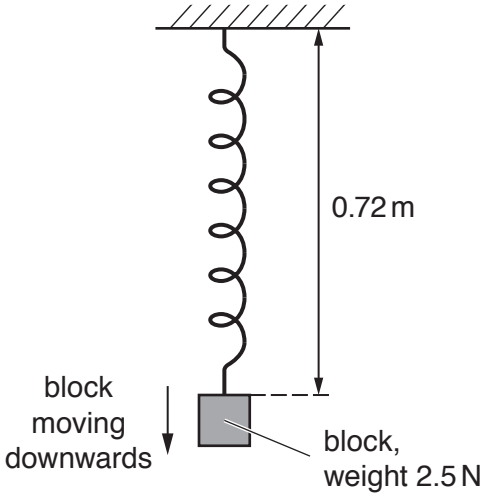

Fig. 3.3

A block of weight 2.5 N is then attached to the spring. The block is then released and begins to move downwards. At one instant, as the block is continuing to move downwards, the spring has a length of 0.72 m, as shown in Fig. 3.3.

Assume that the air resistance and the mass of the spring are both negligible.

© UCLES 2019

(a) For the change in length of the spring from 0.40 m to 0.72 m:

(i) use Fig. 3.1 to show that the increase in elastic potential energy of the spring is 0.64 J

[2]

(ii) calculate the decrease in gravitational potential energy of the block of weight 2.5 N.

decrease in potential energy = ... J [2]

(b) Use the information in **(a)(i)** and your answer in **(a)(ii)** to determine, for the instant when the length of the spring is 0.72 m:

(i) the kinetic energy of the block

kinetic energy = ... J [1]

(ii) the speed of the block.

speed = ... $m\,s^{-1}$ [2]

[Total: 7]

© UCLES 2019

4 **(a)** A spherical oil drop has a radius of 1.2×10^{-6} m. The density of the oil is 940 kg m^{-3}.

(i) Show that the mass of the oil drop is 6.8×10^{-15} kg.

[2]

(ii) The oil drop is charged. Explain why it is impossible for the magnitude of the charge to be 8.0×10^{-20} C.

.....

.....[1]

(b) The charged oil drop in **(a)** is in a vacuum between two horizontal metal plates, as illustrated in Fig. 4.1.

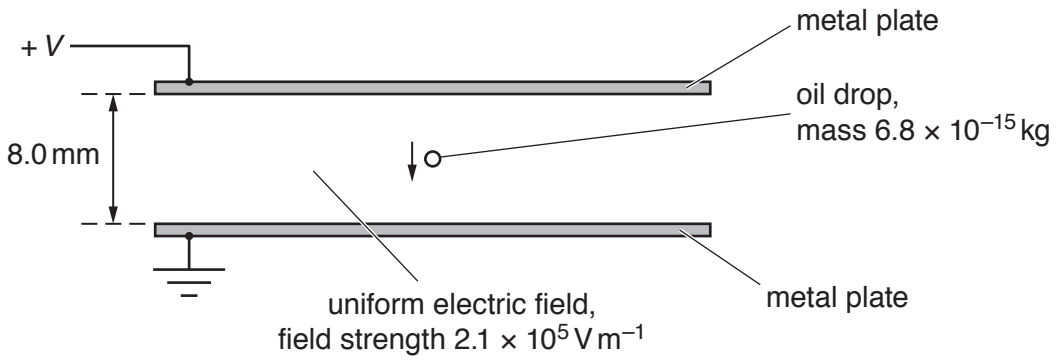

Fig. 4.1

The plates are separated by a distance of 8.0 mm. The electric field between the plates is uniform and has a field strength of 2.1×10^5 V m^{-1}.

The oil drop moves vertically downwards with a constant speed.

(i) Calculate the potential difference V between the plates.

V = ... V [2]

(ii) Explain how the motion of the oil drop shows that it is in equilibrium.

.....

.....[1]

© UCLES 2019

(iii) Determine the charge on the oil drop.

charge = ... C

sign of charge .....

[3]

(c) The magnitude of the potential difference between the plates in **(b)** is decreased.

(i) Explain why the oil drop accelerates downwards.

.....

.....

.....

.....[2]

(ii) Describe the change to the pattern of the field lines (lines of force) representing the uniform electric field as the potential difference decreases.

.....

.....[1]

(d) Two types of force, X and Y, can act on an oil drop when it is in air, but cannot act on an oil drop when it is in a vacuum. Force X can act on an oil drop when it is stationary or when it is moving. Force Y can only act on an oil drop when it is moving.

State the name of:

(i) force X

.....[1]

(ii) force Y.

.....[1]

[Total: 14]

5 **(a)** A loudspeaker oscillates with frequency f to produce sound waves of wavelength λ. The loudspeaker makes N oscillations in time t.

(i) State expressions, in terms of some or all of the symbols f, λ and N, for:

1. the distance moved by a wavefront in time t

distance = ...

2. time t.

time t = ...
[2]

(ii) Use your answers in **(i)** to deduce the equation relating the speed v of the sound wave to f and λ.

[1]

(b) The waveform of a sound wave is displayed on the screen of a cathode-ray oscilloscope (c.r.o.), as shown in Fig. 5.1.

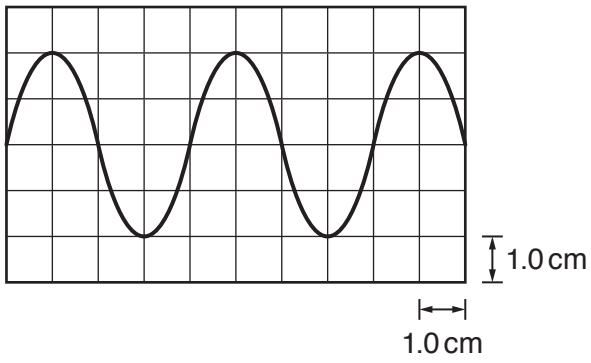

Fig. 5.1

The time-base setting is 0.20 ms cm^{-1}.

Determine the frequency of the sound wave.

frequency = ... Hz [2]

© UCLES 2019

(c) Two sources S_1 and S_2 of sound waves are positioned as shown in Fig. 5.2.

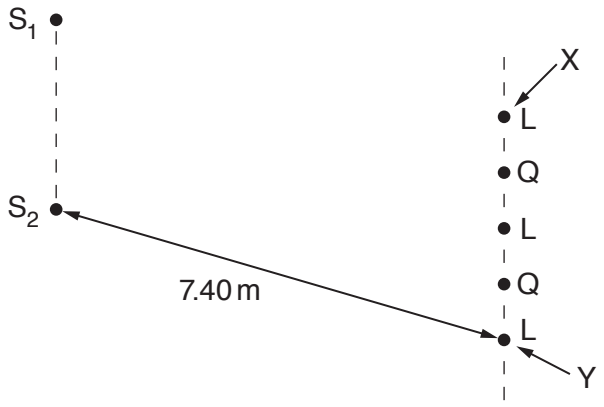

Fig. 5.2 (not to scale)

The sources emit coherent sound waves of wavelength 0.85 m. A sound detector is moved parallel to the line S_1S_2 from a point X to a point Y. Alternate positions of maximum loudness L and minimum loudness Q are detected, as illustrated in Fig. 5.2.

Distance S_1X is equal to distance S_2X. Distance S_2Y is 7.40 m.

(i) Explain what is meant by *coherent* waves.

.....

.....[1]

(ii) State the phase difference between the two waves arriving at the position of minimum loudness Q that is closest to point X.

phase difference = ... ° [1]

(iii) Determine the distance S_1Y.

distance = ... m [2]

[Total: 9]

6 A battery of electromotive force (e.m.f.) E and internal resistance r is connected to a variable resistor of resistance R, as shown in Fig. 6.1.

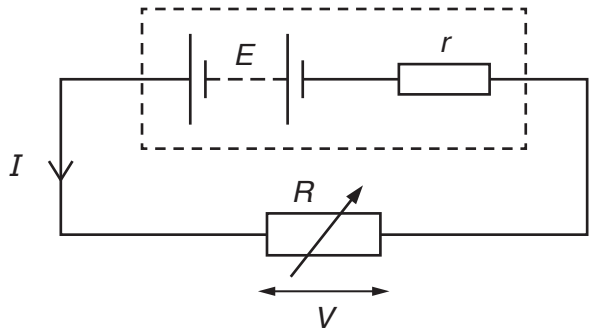

Fig. 6.1

The current in the circuit is I and the potential difference across the variable resistor is V.

(a) Explain, in terms of energy, why V is less than E.

.....

.....[1]

(b) State an equation relating E, I, r and V.

.....[1]

(c) The resistance R of the variable resistor is varied. The variation with I of V is shown in Fig. 6.2.

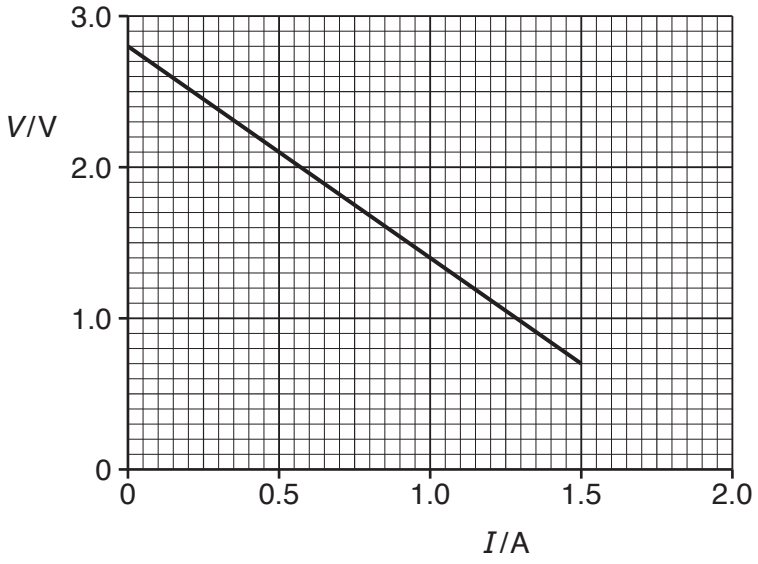

Fig. 6.2

© UCLES 2019

Use Fig. 6.2 to:

(i) explain how it may be deduced that the e.m.f. of the battery is 2.8 V

.....

.....[1]

(ii) calculate the internal resistance *r*.

r = ... Ω [2]

(d) The battery stores 9.2 kJ of energy. The variable resistor is adjusted so that *V* = 2.1 V. Use Fig. 6.2 to:

(i) calculate resistance *R*

R = ... Ω [1]

(ii) calculate the number of conduction electrons moving through the battery in a time of 1.0 s

number = ... [1]

(iii) determine the time taken for the energy in the battery to become equal to 1.6 kJ. (Assume that the e.m.f. of the battery and the current in the battery remain constant.)

time taken = ... s [3]

[Total: 10]

© UCLES 2019

[Turn over

7 **(a)** One of the results of the α-particle scattering experiment is that a very small minority of the α-particles are scattered through angles greater than 90°.

State what may be inferred about the structure of the atom from this result.

.....

.....

.....

.....[2]

(b) A hadron has an overall charge of $+e$, where e is the elementary charge. The hadron contains three quarks. One of the quarks is a strange (s) quark.

(i) State the charge, in terms of e, of the strange (s) quark.

charge = ... [1]

(ii) The other two quarks in the hadron have the same charge as each other.

By considering charge, determine a possible type (flavour) of the other two quarks. Explain your working.

.....

.....[2]

[Total: 5]

Permission to reproduce items where third-party owned material protected by copyright is included has been sought and cleared where possible. Every reasonable effort has been made by the publisher (UCLES) to trace copyright holders, but if any items requiring clearance have unwittingly been included, the publisher will be pleased to make amends at the earliest possible opportunity.

To avoid the issue of disclosure of answer-related information to candidates, all copyright acknowledgements are reproduced online in the Cambridge Assessment International Education Copyright Acknowledgements Booklet. This is produced for each series of examinations and is freely available to download at www.cambridgeinternational.org after the live examination series.

Cambridge Assessment International Education is part of the Cambridge Assessment Group. Cambridge Assessment is the brand name of the University of Cambridge Local Examinations Syndicate (UCLES), which itself is a department of the University of Cambridge.

© UCLES 2019